INSTALLATION INSTRUCTIONS

	FTS21275	3.5” GM HD UNIBALL UCA KIT
1	FT20902	UPPER CONTROL ARM (DRIVER)
1	FT20903	UPPER CONTROL ARM (PASSENGER)
1	FT20906	HARDWARE SUBASSEMBLY
2	FT20910	TORSION KEY

	FT20946 - HARDWARE KIT	LOCATION
2	9/16-18 C-LOCK NUT	
2	9/16 SAE WASHER	
2	1/2-20 X 1” BOLT 12 PT	
1	THREAD LOCKING COMPOUND	

	SHOCK OPTIONS	
2	FTS6341	STEALTH SHOCK (FRONT)
2	FTS6019	STEALTH SHOCK (REAR)
2	FTS811532	2.25 DLSS N/R SHOCK (FRONT)
2	FTS810942	2.25 DLSS N/R SHOCK (REAR)
1	FTS801532D	2.25 DLSS RESI (DRIVER FRONT)
1	FTS801532P	2.25 DLSS RESI (PASS FRONT)

	FT20906	HARDWARE SUBASSEMBLY
2	FT20579	UNIBALL SPACER
1	FT20946	HARDWARE KIT
1	FT21275i	INSTRUCTIONS
4	FT84	GREASE FITTING 1/4-28
1	FT90170	BUSHING KIT
2	FT90152	MISALIGNMENT (UPPER)
2	FT90153	MISALIGNMENT (LOWER)
1	FT90154	BEARING CAP KIT
2	FT94534	UNIBALL ADAPTOR PIN
1	FTAS12	STICKER 10 X 4
1	FTAS16	DRIVER WARNING DECAL
1	FTLUBE	URETHANE GREASE PACKET
1	FTREGCARD	REGISTRATION CARD

2020-2024 GM 2500HD 4WD
3.5” UNIBALL UPPER CONTROL ARM KIT
FTS21275

NOTE: TO ORDER WEARABLE REPLACEMENT COMPONENTS DO NOT USE PART NUMBERS SHOWN ON THIS INSTRUCTION SHEET. GO TO FABTECH WEBSITE AND LOOK UP WEARABLE REPLACEMENT PARTS TO FIND THE PROPER PART NUMBER TO ORDER.

Fabtech Motorsports | 4331 Eucalyptus Ave. Chino, CA 91710

Tech Line: 909-597-7800 | **Fax:** 909-597-7185 | **Web:** www.fabtechmotorsports.com

- TOOL LIST -

Required Tools (Not Included)

Basic Hand Tools
Floor Jack
Jack Stands
Assorted Metric and S.A.E sockets, and Allen wrenches
Torque Wrench
Die Grinder w/ Cutoff Wheel or Sawzall

- PRE-INSTALLATION NOTES -

For technical assistance call: **909-597-7800** or e-mail: **info@fabtechmotorsports.com**

READ THIS BEFORE YOU BEGIN INSTALLATION -

Check all parts to the parts list above before beginning installation. If any parts are missing contact Fabtech at 909-597-7800 and a replacement part will be sent to you immediately.

Read all instructions thoroughly from start to finish before beginning the installation. If these instructions are not properly followed severe frame, driveline and / or suspension damage may occur.

Check your local city and state laws prior to the installation of this system for legality. Do not install if not legal in your area.

Prior to the installation of this suspension system perform a front end alignment and record. Do not install this system if the vehicle alignment is not within factory specifications. Check for frame and suspension damage prior to installation.

The installation of this suspension system should be performed by two professional mechanics.

This suspension must be installed with Fabtech shock absorbers.

Installation of all fasteners requires the use of provided thread locking compound with proper torque values as indicated throughout the installation. Apply thread locking compound upon the final torque of the fastener.

WARNING- Installation of this system will alter the center of gravity of the vehicle and may increase roll over as compared to stock.

Vehicles that receive oversized tires should check ball joints, uniballs, tie rods ends, pitman arm and idler arm every 2500-5000 miles for wear and replace as needed.

Verify differential fluid is at manufactures recommended level prior to kit installation. Installation of the kit will reposition the differential and the fill plug hole may be in a different position. (For example, if the manufacture recommends 3 quarts of fluid, make sure the diff has 3 quarts of fluid). Check your specific manual for correct amount of fluid.

FOOTNOTES -

- Can not use OEM wheel and tire
- Does not fit standard cab
- Does not fit GMC AT4 or Chevy Trail Boss models

Prior to installing this kit, with the vehicle on level ground. Measure the height of your vehicle. This measurement can be recorded from the center of the wheel, straight up to the top of the inner fender lip. Record the measurements below.

LF:_____ **RF:**_____

LR:_____ **RR:**_____

- INSTRUCTIONS -

FRONT SUSPENSION

1. Disconnect the negative terminal on the battery. Jack up the front end of the truck and support the frame rails with jack stands. **NEVER WORK UNDER AN UNSUPPORTED VEHICLE!** Remove the front tires.

2. Peel back the wheel well liner and remove the (2) upper shock mounting nuts. Next, remove the lower shock hardware then remove the shock from the vehicle. Save hardware. **SEE FIGURES 1-2**

FIGURE 1 - STEP 2

FIGURE 2 - STEP 2

3. Locate and remove the torsion bar adjusting bolts. Save for re-installation. **SEE FIGURE 3**

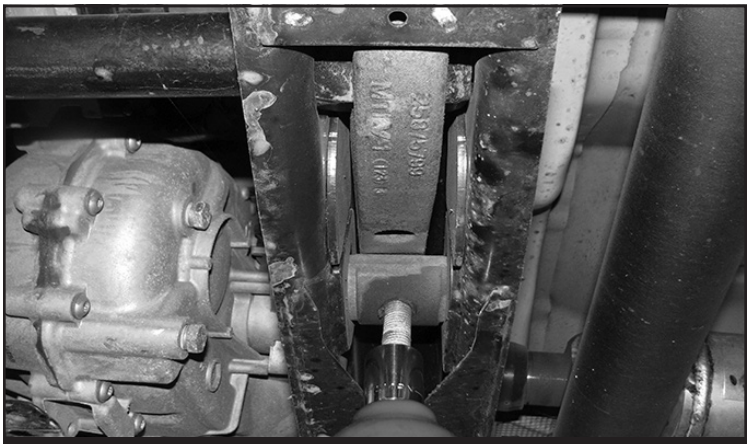

FIGURE 3 - STEP 3

4. Using a torsion bar removal tool, run the torsion key up and remove the torsion key adjusting block from the crossmember. **SEE FIGURES 4-5**

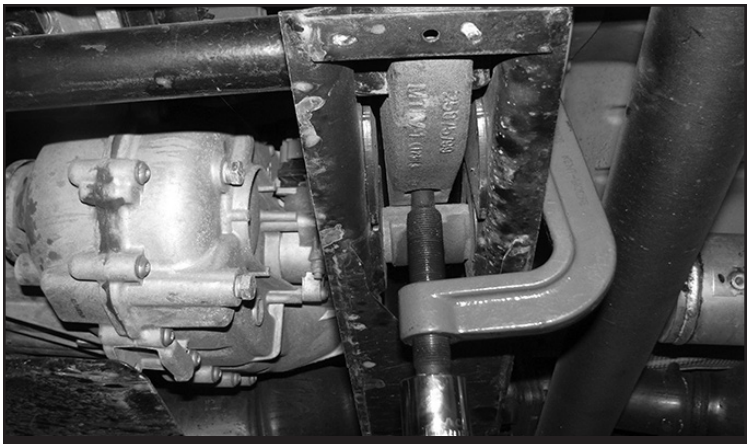

FIGURE 4 - STEP 4

FIGURE 5 - STEP 4

5. Carefully unload and remove the torsion key tool. Next, slide the torsion bar forward **(note the key clocking position)** then remove the factory torsion key. **SEE FIGURES 6-7**

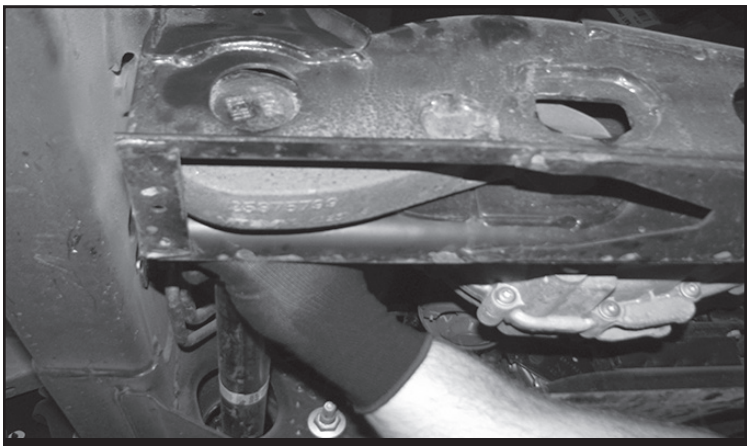

FIGURE 6 - STEP 5

FIGURE 7 - STEP 5

6. Repeat steps on opposite side.

7. Loosen the upper ball joint nut attaching the upper control arm to the knuckle. Using a hammer, strike the knuckle at the ball joint to dislodge the ball joint. Remove the nut and disconnect the control arm from the knuckle. Secure the knuckle upright so it doesnt hang freely.

8. Remove the upper control arm from the vehicle. Save hardware.

9. Locate the new FT20902 (Driver control arm) & FT20903 (Passenger control arm). Open the supplied FT90170 (Bushing Kit) install 4 bushings, 2 sleeves and 2 FT84 (Zerk fittings) into each arm. **NOTE: Coat the new bushings and sleeves using the supplied grease packet. SEE FIGURE 8**

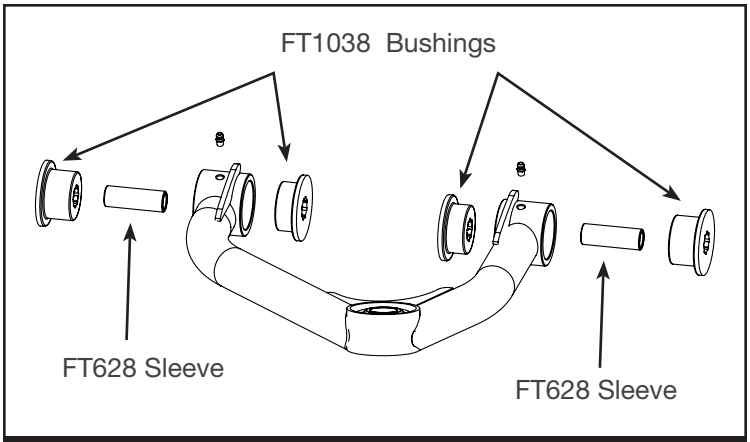

FIGURE 8 - STEP 9

10. Drill out the factory upper knuckle taper to 9/16" **SEE FIGURE 9**

FIGURE 9 - STEP 10

11. Insert FT90153 (Lower Misalignment) & FT20579 (Spacer) onto FT94534 (Uniball Pin). Then, install to the factory knuckle using the supplied 9/16" washer and nut. Torque to153 ft-lbs. **SEE FIGURES 10-11**

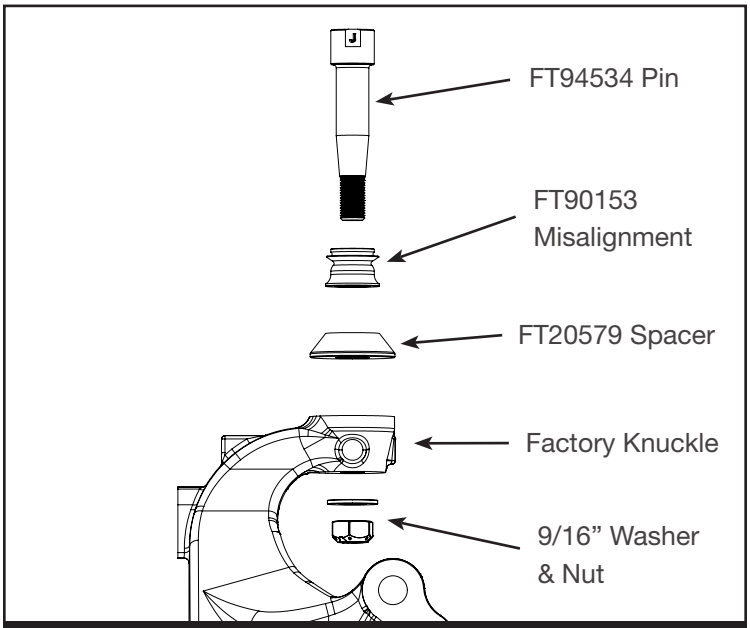

FIGURE 10 - STEP 11

FIGURE 11 - STEP 11

12. Repeat steps on the opposite side.

13. Install the FT20902 (Driver) & FT20903 (Pass) upper control arms using the factory hardware. Install the bolts with the bolt head inside the tower and the threaded end outside. Using thread locker torque 160 ft-lbs. **SEE FIGURE 12**

FIGURE 12 - STEP 13

14. Install the new Fabtech control arm to the pin installed onto the factory knuckle using FT90152 (Upper misalignment), 1/2” 12 point bolt and FT90154 (Cap). Torque to 106 ft-lbs. **SEE FIGURES 13-15**

FIGURE 13 - STEP 14

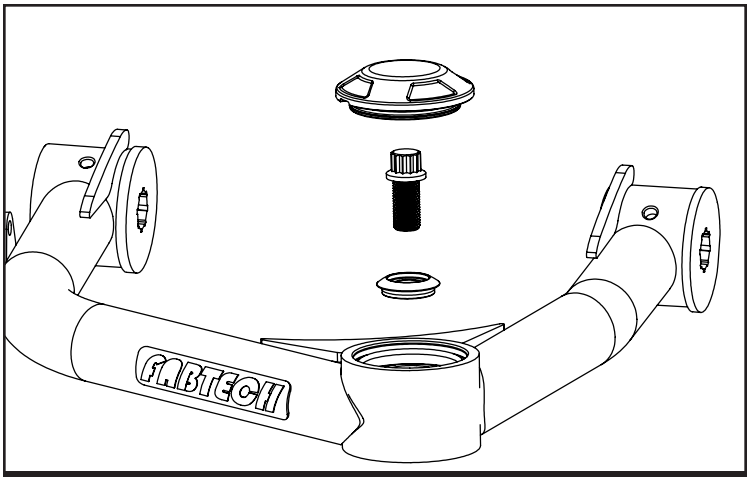

FIGURE 14 - STEP 14

FIGURE 15 - STEP 14

15. Install the new torsion key (FT20910) into the original position. **SEE FIGURE 16**

FIGURE 16 - STEP 15

16. Reinstall the torsion key tool and adjust upward enough to reinsert the adjustment block. Remove the tool and install the factory bolt. **SEE FIGURES 17-18**.

FIGURE 17 - STEP 16

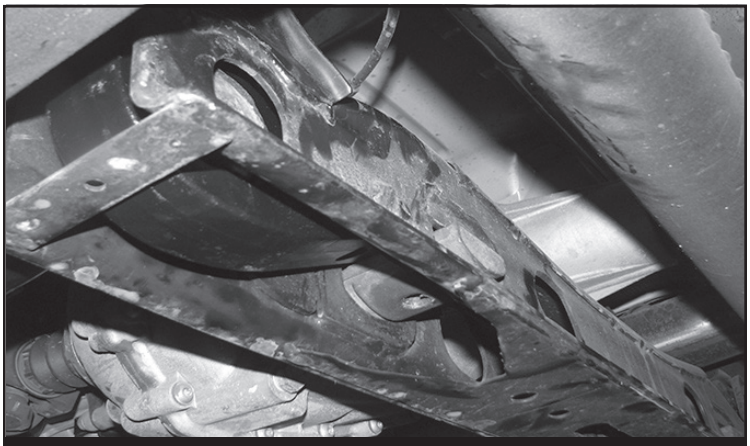

FIGURE 18 - STEP 16

17. Use **FIGURE BELOW** for torsion key bolt pre-adjustment. These measurements will be from the length of the thread left between the block and the bolt head. **NOTE: This is a starting point more adjustment may be required once vehicle is on the ground. SEE FIGURE 19.** Repeat steps on the opposite side.

- **2" Lift:** Driver- 1-3/16" / Passenger- 1-3/8"
- **3.5" Lift:** Driver- 5/8" / Passenger- 1"

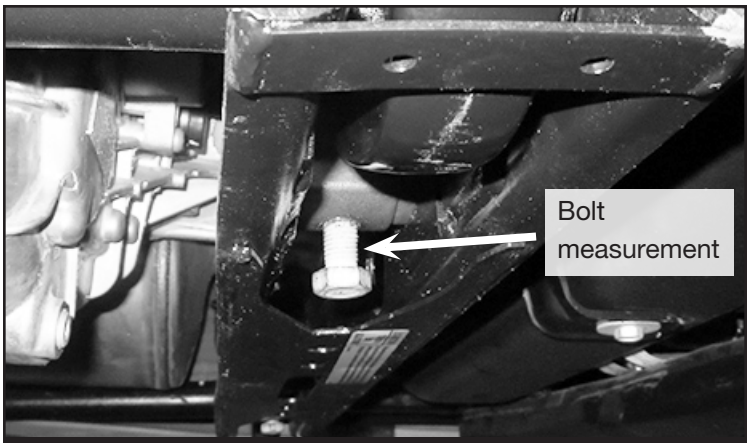

FIGURE 19 - STEP 17

18. Install FTS6341 (Stealth) or FTS811532 (Dirt Logic N/R) shocks using the factory lower hardware and provided hardware in the shock box for the upper mount. Torque the upper hardware to 112 ft-lbs and the lower to 160 ft-lbs.

REAR SUSPENSION

19. With the rear axle supported remove the rear factory shocks and save the hardware.
20. Install either FTS6019 (Stealth) or FTS810942 (Dirt Logic N/R) shocks using the bushings and sleeves in the box and the factory mounting hardware.
21. Install tires and wheels and torque lug nuts to wheel manufacturer's specifications. Turn front tires left to right and check for appropriate tire clearance. **Note - Some oversized tires may require trimming of the front bumper & valance.**
22. Check front end alignment and set to factory specifications. Readjust headlights.
23. Recheck all bolts for proper torque.
24. Recheck brake hoses, ABS wires and suspension parts for proper tire clearance while turning tires fully left to right.
25. Check the fluid in the front and rear differential and fill if needed with factory specification differential oil. **Note - some differentials may expel fluid after filling and driving. This can be normal in resetting the fluid level with the new position of the differential/s.**
26. Install Driver Warning Decal. Complete product registration card and mail to Fabtech in order to receive future safety and technical bulletins on this suspension.

Vehicles that will receive oversized tires should check ball joints, uniballs and all steering components every 2500-5000 miles for wear and replace as required.

RETORQUE ALL NUTS, BOLTS AND LUGS AFTER 50 MILES AND PERIODICALLY THEREAFTER.

For technical assistance call: **909-597-7800**

- Product Warranty and Warnings -

Fabtech provides a Limited Lifetime Warranty to the original retail purchaser who owns the vehicle, on which the product was originally installed, for defects in workmanship and materials.

The Limited Lifetime Warranty excludes the following Fabtech items; bushings, bump stops, ball joints, tie rod ends, limiting straps, cross shafts, heim joints and driveshafts. These parts are subject to wear and are not considered defective when worn. They are warranted for 60 days from the date of purchase for defects in workmanship.

Dirt Logic and Performance Coilover take apart shocks are considered a serviceable shock with a one year warranty on leakage only. Service seal kits are available separately for future maintenance. All other shocks are covered under our Limited Lifetime Warranty.

Fabtech does not warrant any product for finish, alterations, modifications and/or installation contrary to Fabtech's instructions. Alterations to the finish of the parts including but not limited to painting, powder coating, plating and/or welding will void all warranties. Some finish damage may occur to parts during shipping, which is considered normal and is not covered under warranty.

Fabtech products are not designed nor intended to be installed on vehicles used in race applications or for racing purposes or for similar activities. (A "RACE" is defined as any contest between two or more vehicles, or any contest of one or more vehicle against the clock, whether or not such contest is for a prize). This warranty does not include coverage for police or taxi vehicles, race vehicles, or vehicles used for government or commercial purposes. Also excluded from this warranty are sales outside of the United States of America.

Installation of most suspension products will raise the center of gravity of the vehicle and will cause the vehicle to handle differently than stock. It may increase the vehicle's susceptibility to a rollover, on road and off road, at all speeds. Extreme care should be taken to operate the vehicle safely at all times to prevent rollover or loss of control resulting in serious injury or death. Fabtech front end Desert Guards may impair the deployment or operation of vehicles equipped with supplemental restraining systems/air bag systems and should not be installed if the vehicle is equipped as so.

Fabtech makes every effort to ensure suspension product compatibility with all vehicles listed on the website, but due to unknown auto manufacturer's production changes and/or inconstancies by the auto manufacturer, Fabtech cannot be responsible for 100% compatibility, including the fitment of tire and wheel sizes listed. The Tire and Wheel sizes listed in Fabtech's website are only a guideline for street driving with noted fender trimming. Fabtech is not responsible for damages to the vehicle's body or tires. Fabtech is not responsible for premature wear of factory components due to the installation of oversized tires and wheels.

Fabtech's obligation under this warranty is limited to the repair or replacement, at Fabtech option, of the defective product only. All costs of removal, installation or re-installation, freight charges, incidental or consequential damages are expressly excluded from this warranty. Fabtech is not responsible for damages and/or warranty of other vehicle parts related or non related to the installed Fabtech product. This warranty is expressly in lieu of all other warranties expressed or implied. This warranty shall not apply to any product that has been subject to accident, negligence, alteration, abuse or misuse as determined by Fabtech.

Fabtech suspension components must be installed as a complete system including shocks as shown on our website. All warranties will become void if Fabtech parts are combined and/or substituted with other aftermarket suspension products. Combination and/or substitution of other aftermarket suspension parts may cause premature wear and/or product failure resulting in an accident causing injury or death. Fabtech does not warrant products not manufactured by Fabtech.

Depending on the condition of the factory suspension components retained after the installation of a Fabtech suspension not all vehicles may have the same ride stance front to rear as described in the website. The blue color of suspension components shown in all Fabtech photographs are for display purposes only. Majority of all Fabtech components will be black specifically where noted with part numbers ending in BK.

Installation of Fabtech product may void the vehicles factory warranty; it is the consumer's responsibility to check with their local vehicle's dealer for warranty disposition before the installation of the product. Some state laws may prohibit modification of suspension to a vehicle in whole or in part. It is the responsibility of the installer and consumer to consult local laws prior to the installation of any Fabtech suspension product to comply with such written laws.

It is the responsibility of the distributor and/or the retailer to review all warranties and warnings of Fabtech products with the consumer prior to purchase.

Fabtech reserves the right to super cede, discontinue, change the design, finish, part number and/or application of parts when deemed necessary without written notice. Fabtech is not responsible for misprints or typographical errors within the website or price sheet. For the most recent Product Warranty and Warnings visit our website www.fabtechmotorsports.com